ILLUMINATOR DATA

LT2QOG040-00-X-UV365-24V

Lighting Dimension

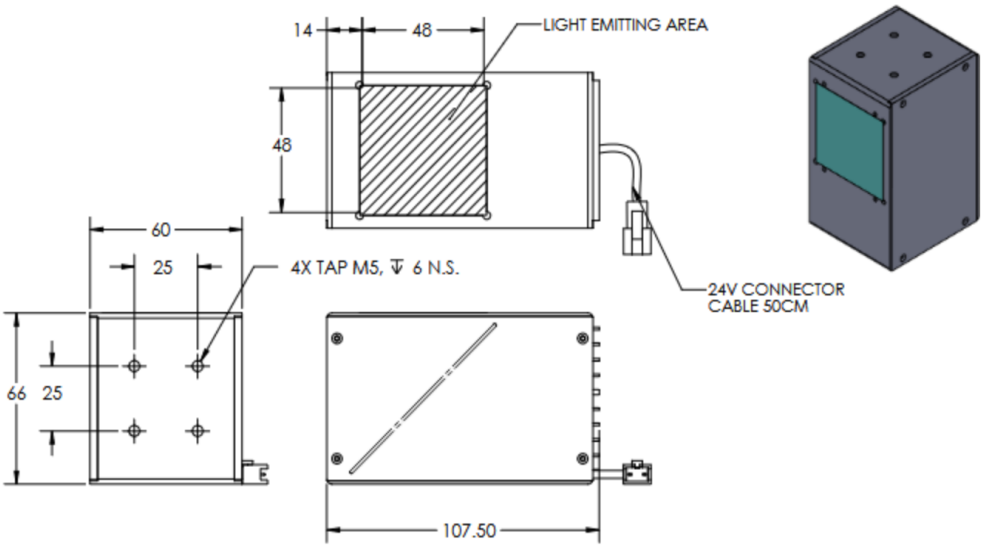

Mechanical Information	
Casing Material	Extrusion, Aluminium
Storage Temperature Range	0 - 45°C
Storage Humidity Range	20 - 85%
Weight	0g
Width / Inner Diameter	66mm
Length / Outer Diameter	107.5mm
Height / Thickness	60mm

ILLUMINATOR DATA

LT2QOG040-00-X-UV365-24V

Lighting Information			
LED Color	UV 365		
Wavelength	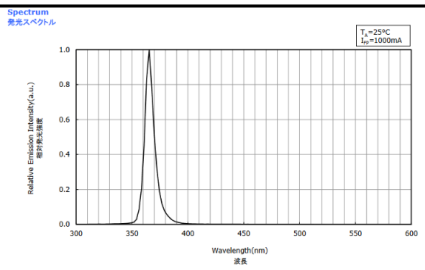 360 nm - 370 nm		
Working Distance	20mm	30mm	50mm
Intensity (±15%)	0lx	0lx	0lx
Illumination (Number of Row)	0		
Illumination Active Area	Active Outer Diameter	48	
	Active Inner Diameter	48	
Emission Angle	0°		
Eye Safety Class (IEC62471)	Moderate-Risk (Class 2) Products with sources, which pose a potential photobiological hazard even if a human does not feel any visual or thermal discomfort which is caused btthe high intensity light. Example: This hazard level exceeds the criterion for Risk Group 1. 1,000 seconds of exposure, however, poses no acute hazard to either eye or skin, and 0.25 seconds of the intent starting causes no blue light retinal hazard.		
Chromaticity Table For White Colour Only			

Electrical Information	
Rated Voltage	$24V_{(Min)}$ - $24V_{(Max)}$
Rated Current	60mA
Power Consumption	1.440W
Casing Temperature, After 60 minutes operation	60°C

Strobe Mode Specification		
*Normal Strobe Voltage	24V	
*Normal Strobe Current	60mA	
Overdrive Voltage Range	Min: 36V	Max: 48V
Overdrive Current Range	Min: 133mA	Max: 205mA
Recommended Overdrive Voltage	36V	
**Max. Trigger Pulse Duration	10%	
**Max. Duty Cycle	10msec	

*Normal strobe means the lighting is operated using the rated power. Overdrive means the power supplied to the lighting exceeded the rated power.

**Overdrive condition must not exceed the max. trigger pulse duration and max. duty cycle.

ILLUMINATOR DATA

LT2QOG040-00-X-UV365-24V

Connection Information			
Connector Type	JST SMR-03V-B		
Cable Length	500mm		
Pin Configuration	**Pin**	**Signal**	**Cable Color**
	1	24V	RED
	2	-	-
	3	GND	WHITE / BLACK

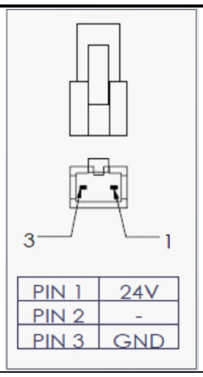

Additional Information	
Additional Cooling Method	Attached to machine part for better heat dissipation
Intensity Controller Selection	LTIC series
CE Conformity	YES
RoHS Compliance	YES

Application	
Illumination Type	UV Illumination
Application Use	• Allow Chemicals That Has UV Lighting Interaction to be Visible Under The Blue Light 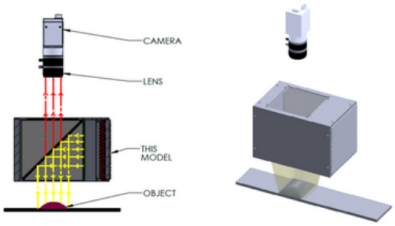

ILLUMINATOR DATA

LT2QOG040-00-X-UV365-24V

Lighting Pattern				
Working Distance	For further details, please contact us			
Display and Image	For further details, please contact us			
Data Results	Horizontal	Meas. (mm)	Vertical	Meas. (mm)
	90%	N.A.	90%	N.A.
	90%	N.A.	90%	N.A.
	80%	N.A.	80%	N.A.
	70%	N.A.	70%	N.A.
	60%	N.A.	60%	N.A.
	50%	N.A.	50%	N.A.
	40%	N.A.	40%	N.A.
	30%	N.A.	30%	N.A.
	20%	N.A.	20%	N.A.
	10%	N.A.	10%	N.A.